60x45cm Combi-Steam Oven
传承系列

F457HERVTAX

The Bertazzoni Modern Series 60x45 cm combi steam oven has 7 functions and 31 litre capacity stainless steel cavity. It offers the possibility to combine traditional functions with three different steam intensity levels: low, medium and high. The Total Steam function use pure vapour to deliver a fast and healthy cooking. Controlled with full touch controls and a TFT display, features a soft opening door and a removable water tank for a quick refilling. Available in Matt Black, Nero Nécor, Avorio with chrome finish and Avorio with copper finish.

Guarda online

特点

紧凑型烤箱特点	
特殊功能	发酵 / 消毒 / 翻热(保温, 风干, 解冻)
尺寸	60x45 cm
功能	对流 / 涡轮增压 / 清洁 / 烧烤 / 纯蒸 / 蒸烤一体
Total volume	31 L
烤箱控制	旋钮 / 触控 TFT 显示器
自动烹饪模式	15 预制菜单
烤箱内门	双
腔体工艺	不锈钢
烤箱层架	4
门铰	柔性闭合
烤箱把手	金属
搁架	1
烤盘	1 stainless steel + 1 perforated
烤箱照明	单

技术参数	
能效等级	A
电气要求	220/240 V - 50/60 Hz
额定功率	2900 W
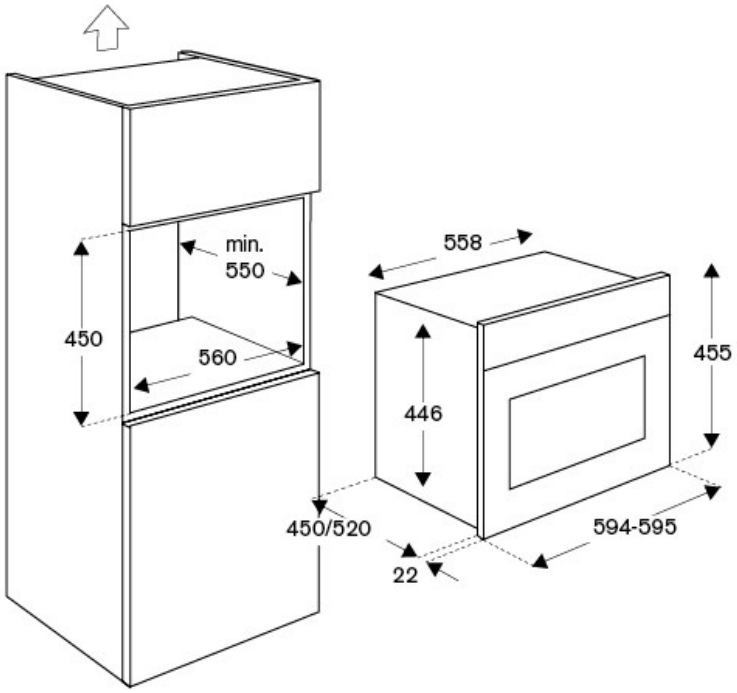
尺寸