60x38m Combi-Microwave Oven
专业系列

F457PROMWSX

This Bertazzoni Professional Series 60x38 cm combi microwave oven has 7 functions. It has a 25 litre stainless-steel capacity cavity and two levels. This oven is large enough to cook for the whole family. The microwave has 10 pre-setting cooking modes and it combines traditional functions with convection and grill options. All functions are controlled with a control knob and electronic buttons and visible on the LED display. Available in stainless steel.

Guarda online

特点

紧凑型烤箱特点	
特殊功能	按时间解冻 / 按重量解冻 / 童锁 / 计时器
尺寸	60x38 cm
微波类型	微烤一体
功能	对流 / 对流烧烤 / 微波 / 微波组合 / 微烤组合 / 烧烤
总容积	25 L
自动烹饪模式	10 自动烹饪模式
烤箱内门	双
腔体工艺	不锈钢
烤箱层架	2
时钟/定时器	确定
微波控制	电子按键和LED显示器
门铰	门开关按键
烤箱照明	单
转盘数量	1 tuntable
转盘直径	315 mm
技术参数	
能效等级	A
电气要求	220/240 V - 50/60 Hz
额定功率	2500 W
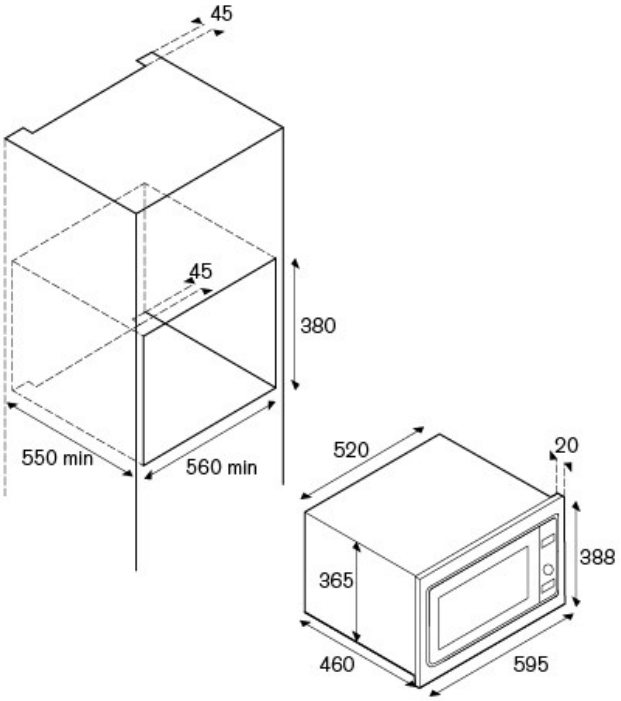
尺寸