45 Coffee Machine

M45CAFX

This high-quality espresso machine performs all the preparation tasks, from grinding the beans to delivering the perfect shot of real Italian coffee of different strengths. Equipment includes cappuccino, hot water and steam functions. It is auto-descaling and auto-rinsing.

Colours shown will vary depending on your screen settings and resolution. Contact your dealer for further advice.

Guarda online
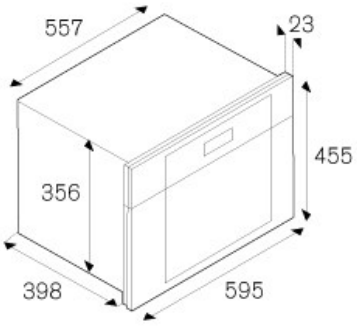
尺寸